CLUTCH CASE ASS'Y	Date : 17. Nov, 2008	Revision : 00	Page: 1/1
Product code : 71010-140-104		Model : VS400	

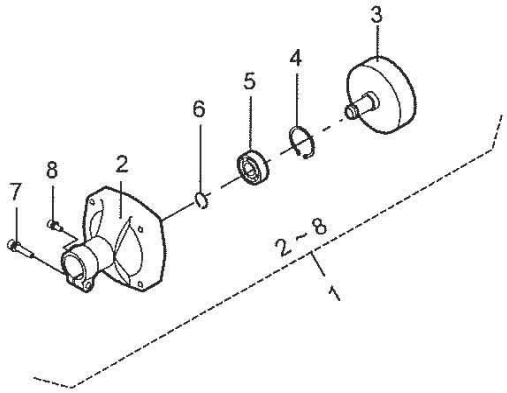

Clutch case ass'y

Brand:

P.cd: 71010-140-104

Date: 17-Nov-2008

Revision: 00

(A): 71010-140-104

(B):

(C):

Ref.No	Parts.No	Parts.Name	Q'ty (A)	Q'ty (B)	Q'ty (C)	Remarks	Recomm(%) Lot.100
1	71010-140-104	CLUTCH CASE ASS'Y	1				
2	51030-146-104	CLUTCH CASE	1			φ28	
3	11014-106	CLUTCH DRUM C.P.	1				
4	811V3500	C-SNAP RING	1				
5	912B6202	BEARING (6202ZZ)	1				
6	812V1500	C-SNAP RING	1				
7	416N0630	SOCKET SCREW	1				
8	413N0515	SOCKET SCREW(W/SW)	1				

Clutch case ass'y

Brand:

P.cd: 71010-140-104

Date: 17-Nov-2008

Revision: 00

(A): 71010-140-104

(B):

(C):

Ref.No	Parts.No	Parts.Name	Q'ty			Remarks	Recomm(%) Lot.100
			(A)	(B)	(C)		